TYPICAL SECTION

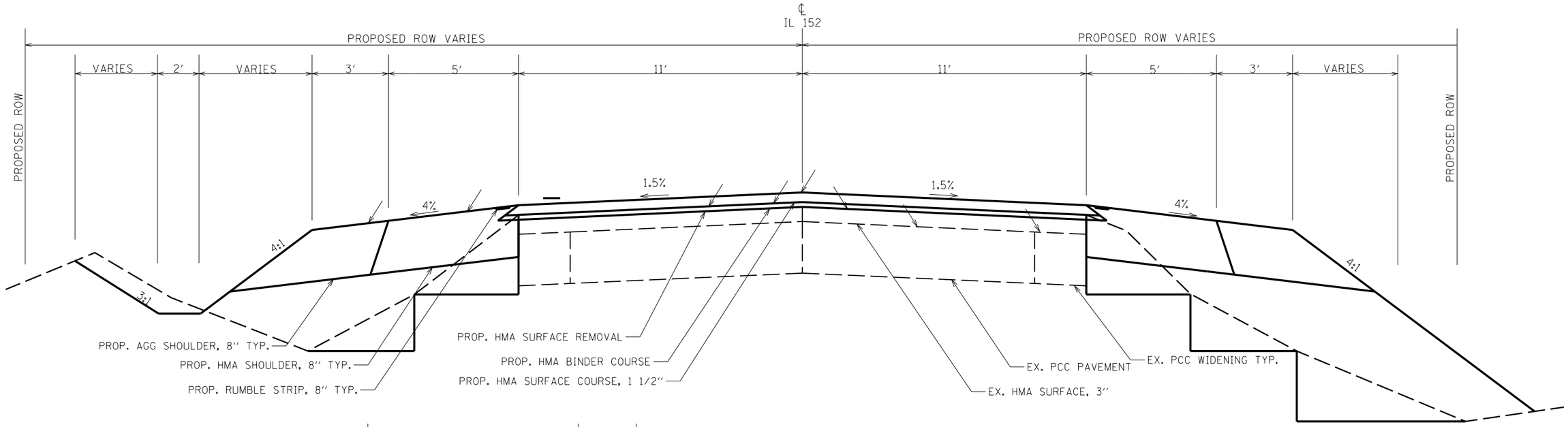

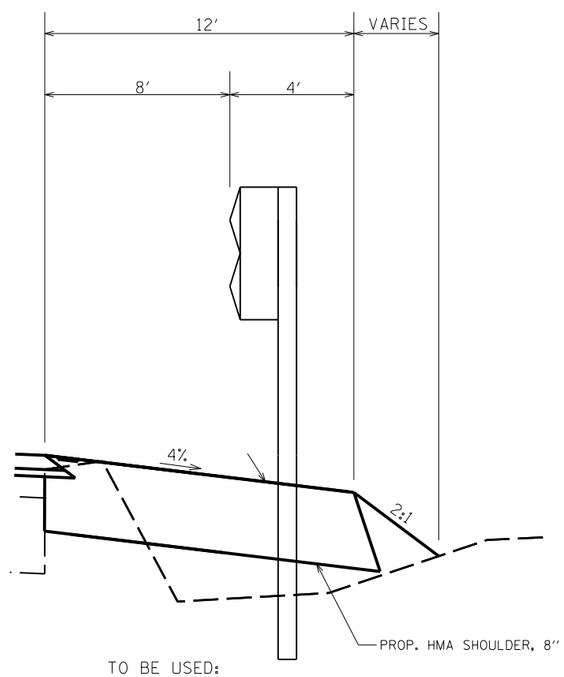

TO BE USED:

IN AREAS WITH GUARDRAIL

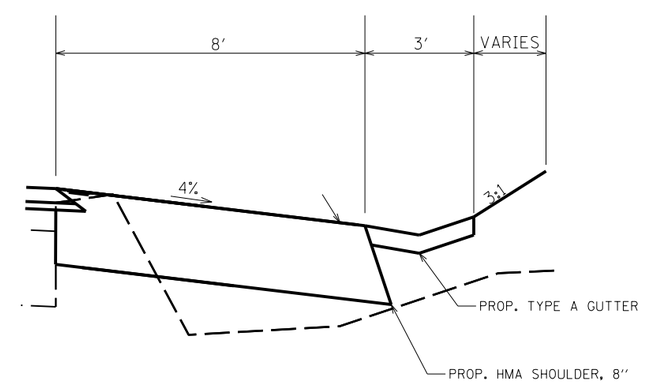

TYPE A GUTTER
TO BE USED:

IN AREAS WITH GUTTER

MODEL: Default
FILE NAME: pw:\\uiduaroom.dot.illinois.gov:PWIDOT\Documents\IDOT Offices\District 9\Projects\78744\CADData\CADsheets\D978744-Sht8-Typ Sch Tlks GroupsElements.dgn

USER NAME = dugasbc	DESIGNED -	REVISED -	
	DRAWN -	REVISED -	
PLOT SCALE = 100.0000 ' / in.	CHECKED -	REVISED -	
PLOT DATE = 12/16/2020	DATE -	REVISED -	

STATE OF ILLINOIS
DEPARTMENT OF TRANSPORTATION

TYPICAL SECTIONS

SCALE: | SHEET OF SHEETS | STA. TO STA.

F.A.P. RTE.	SECTION	COUNTY	TOTAL SHEETS	SHEET NO.
865	104(WRS-3,DR-1,SR-1)	PERRY		
		CONTRACT NO. 78744		
		ILLINOIS FED. AID PROJECT		